MODEL

WT-50

菜渣、浮油乾淨撈除

流理台專用

菜渣、浮油撈除機

SPECIAL FOR WASH-TABLE VEGETABLE RESIDUE & FLOATING OIL SPARATOR

特點：

- 精巧設計，利用流理台底部空間即可安裝，最適合餐飲業寸土寸金的環境。
- 免除挖水池之困擾。
- 流理台排水口免裝燈籠式濾渣籃，可提高排水速度，提高廚房作業效率。
- 可依排水量指定訂做。
- 2μm 厚之油膜，即肉眼望去五彩狀之油膜，皆可撈除。
- 24 小時時間比例控制，可隨作息時間設定運轉。

Feature:

- Exquisite design, can be assembled in thespace under the wash-table, suitable for restaurant and specially using in the small room.
- Not necessary to dig pool.
- Not necessary to assemble the cage type residue basket at drain of the wash-table, draining rate is increased and higher efficiency of the kitchen jobs is obtained.
- Available for sucking oil of 2μm thick, The visible colorific skimming oil.
- Proportional time control device for 24 hours, operation time can be set as customers like.

新型專利第 95050 號
R.O.C. PAT. NO. 95050

型錄備索

另有廢水池使用油水分離機，餐飲廢水套裝設備。

ALSO PROVIDING SKIMMER FOR FLOATING-OIL VEGETABLE RESIDUE SEPARATOR.

MODEL

WT-50

流理台專用
菜渣、浮油撈除機

SPECIAL FOR WASH-TABLE
VEGETABLE RESSIDUE & FLOATING OIL SEPARATOR

規範：

- 處理水量： 9 噸 / 小時，約 3 支 4 分水龍頭流水量。
- 除油量： 1 公升 / 小時。
- 菜渣籃濾網孔徑 ϕ 3 mm 。
- 總消耗電力：電熱器 200 瓦特，馬達 5 瓦特。

Specification:

- Water treated capacity: 9 tons / hour equal to 3 times of the flow through a 1/2" faucet.
- Oil skimmed capacity: 1 l / hr.
- Filter mesh-hole diameter of the vegetable residue basket: ϕ 3mm.
- Power consumption: heater 200W, motor 5 W.

原理示意圖
Principle Chart

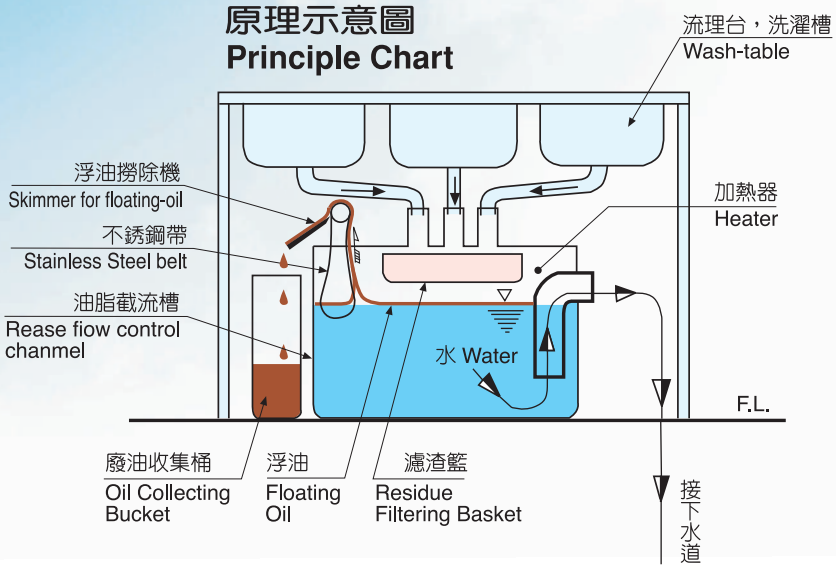

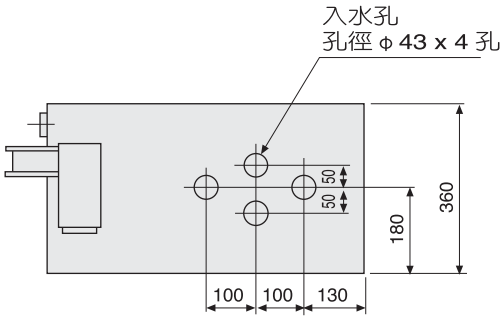

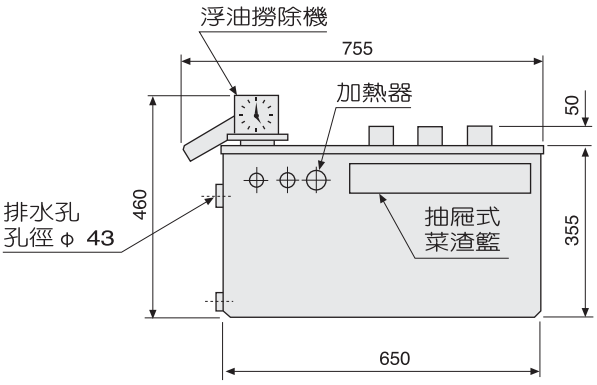

OILSERVE

บริษัท ออยเซิร์ฟ จำกัด
OILSERVE CO., LTD.

9 ซอยทวีวัฒนา 25 แยก 7 แขวงทวีวัฒนา เขตทวีวัฒนา กรุงเทพ ฯ 10170
9 Soi Thawi Watthana 25 Yeak 7, Thawi Watthana, Thawi Watthana, Bangkok 10170
Tel: (+662) 441 9247 Fax : (+662) 441 9248 TAX ID : 0105553015358
E-mail : sales@oilservethai.com, oilserveco@gmail.com, www.oilservethai.com